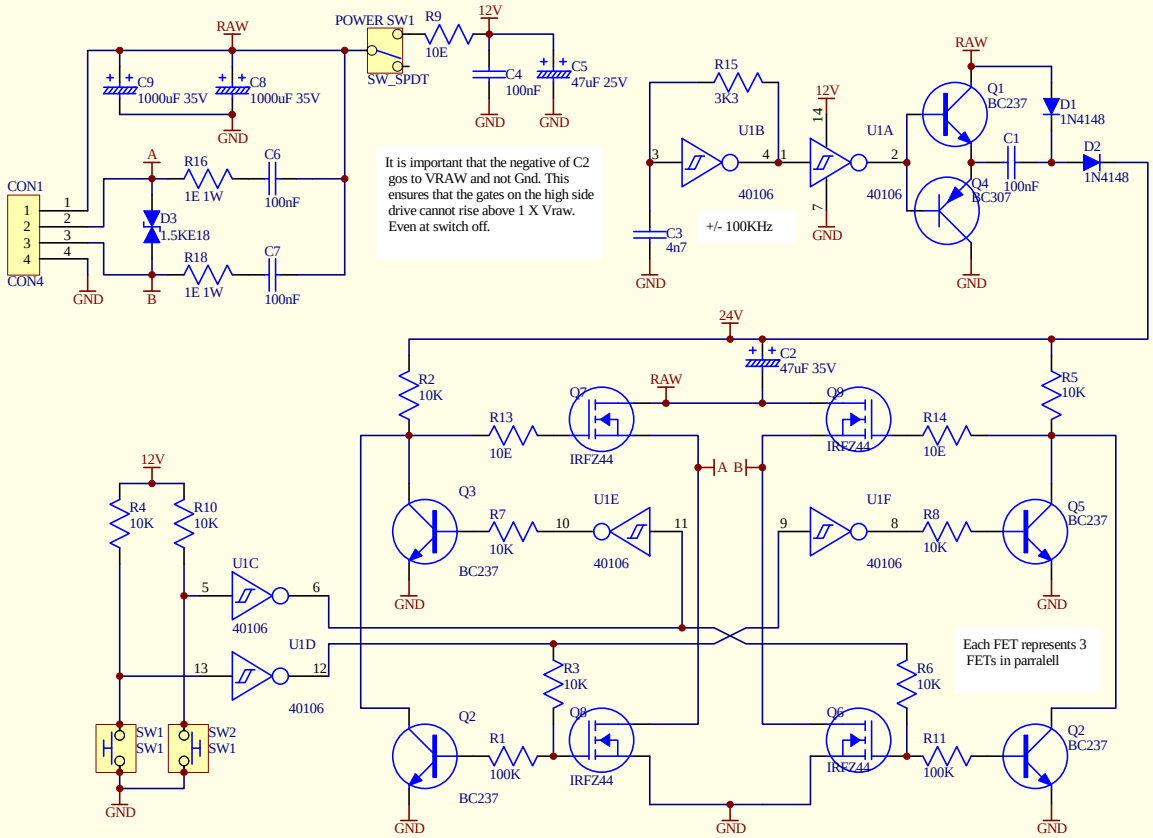

Title		
Size A	Number	Revision
Date: 19-Dec-2006	Sheet of	
File: D:\DELTAS~1\NEWFOL~3\HOIST.SCH	Drawn By:	